U2422H / U2422HE Outline Dimension
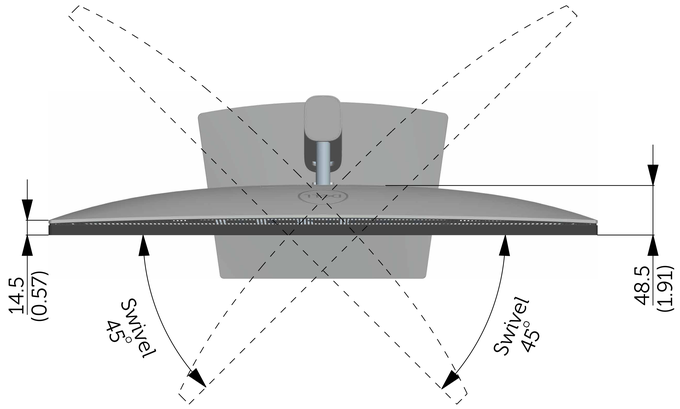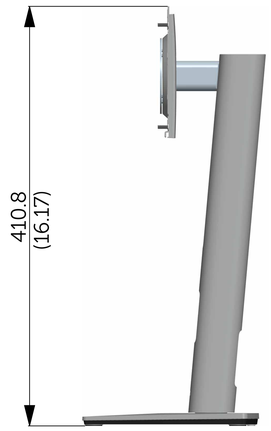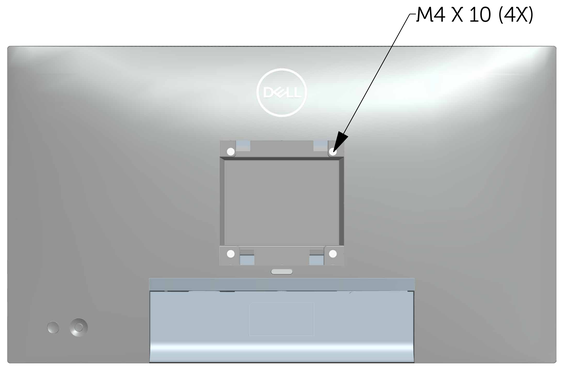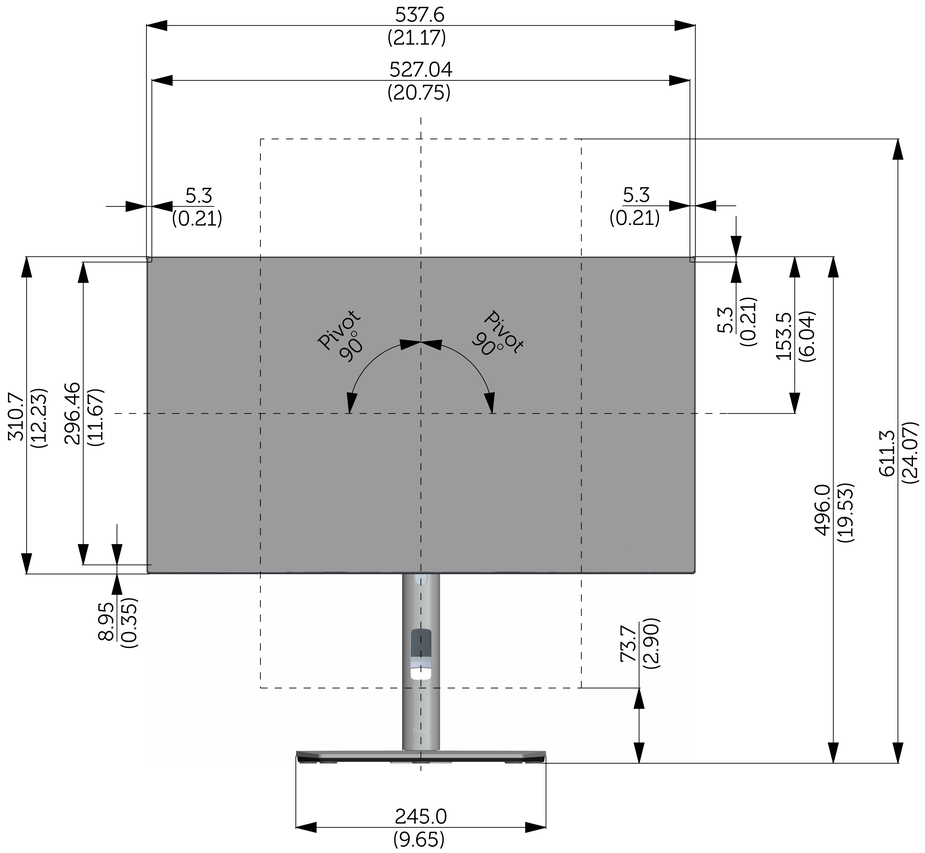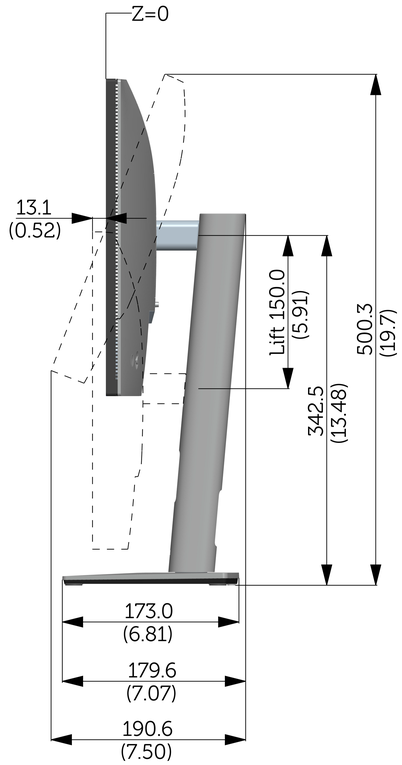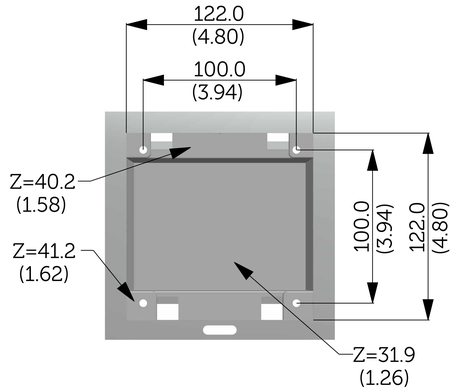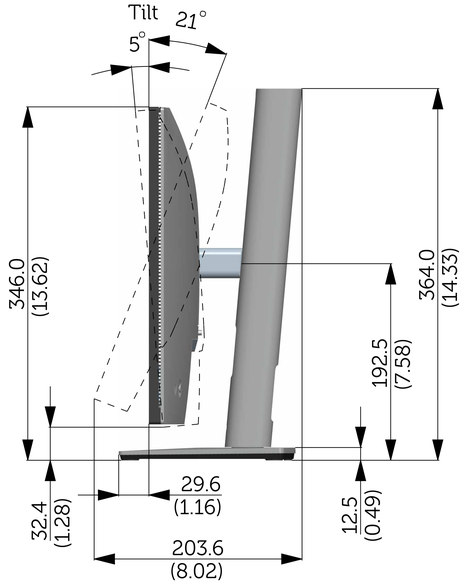
Unit: mm (inch)
Dimension: Nominal
Drawing: Not to scale